Petrobalt design bureau

Technical report

Propulsion Calculation

(FERRY for 750 passengers & 144 cars)

Saint Petersburg
2005

LINE DIAGRAM OF THE ELECTRICAL PART OF THE PROPULSION EQUIPMENT.

TECHNICAL DESCRIPTION

- Main 690 V switchboard and power management system and UPS (swbd included 4 generator incomers)
- Main propulsion with frequency converters and electrical motors
- Forward thruster with frequency converters and electrical motors
- Transformers for propulsion and supply of 450 V system

The vessel control system as well as generators or any equipment on 450 V and 230 V, are not included.

Equipment	No of units	Description
Frequency Converters - Main Propulsion	2	3.000kW, LLC, PWM IGBT, water cooled
Frequency Converters - Fwd Azimuth thr.	1	1.000kW, LLC, PWM IGBT, water cooled
Transformer - LLC	2	2.000kVA, 690/690/450V, IP44, AFWF
Motor - Main Propulsion	2	3.000kW, 690V, 0 - 1200rpm, horisontal, IP54, water cooled, antifriction bearing
Motor - Fwd Azimuth thr.	1	1.000kW, 690V, 0 - 1800rpm, horisontal, IP54, water cooled, antifriction bearing
Distribution Transformer - 690/450V	2	1200kVA, included in LLC transformer
UPS 230V	1	10kVA, 30 min battery back up
Main Switchboard 690V	2	
Commissioning and Sea Trial		Included in the Price: 600 hours
Spare Parts		DNV required spare parts included

AKER KVÆRNER

Single line diagram: Ferry – Low Loss Concept – High Redundancy
Diesel-electric propulsion
02.12.2005 rev 1

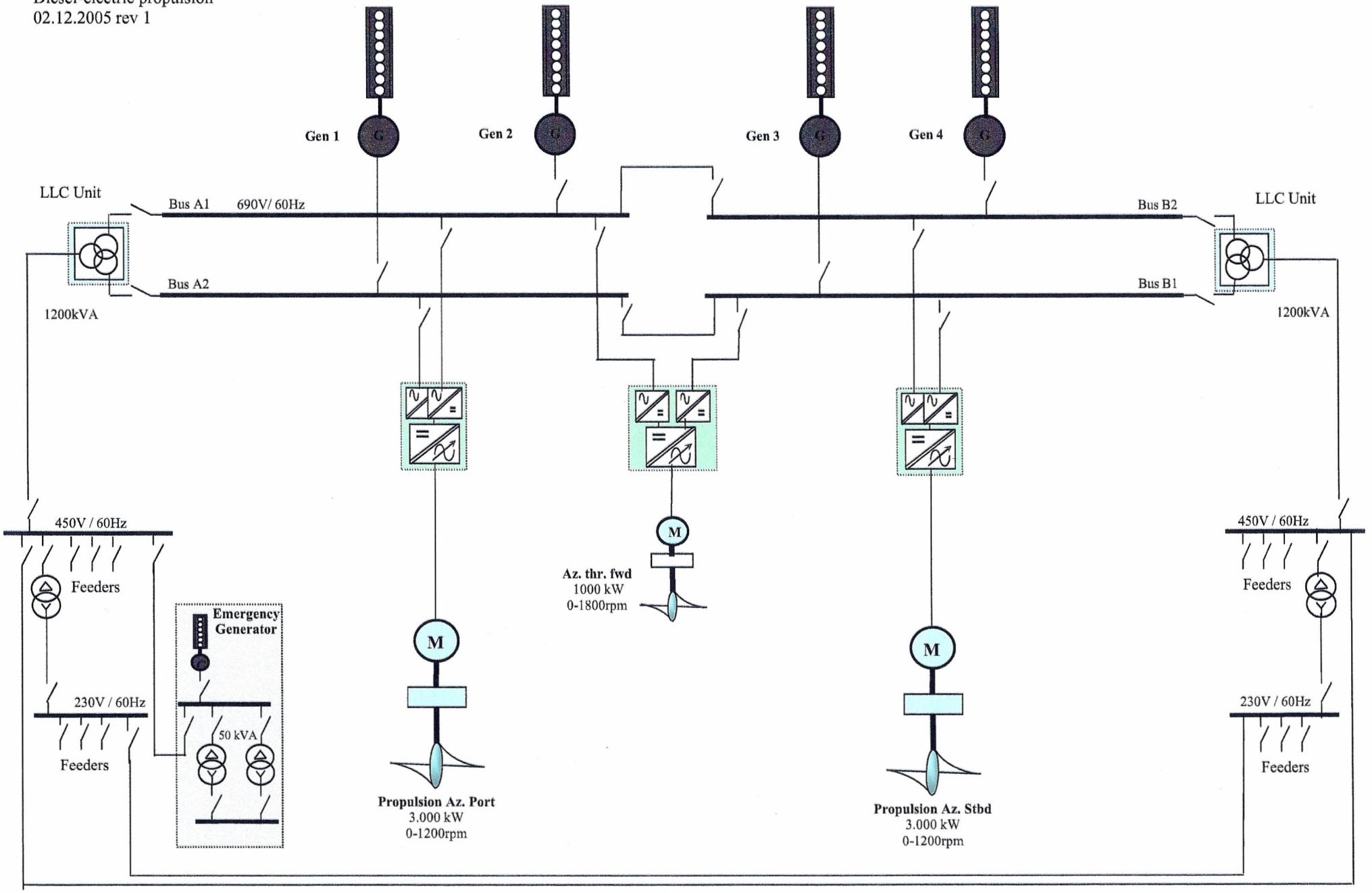

Powering Calculation made by Rolls-Royce

Rolls-Royce

Ulstein Aquamaster
AZIMUTH THRUSTERS

Powering calculation with the Azimuth units

for	P9718		**Ref**	**Matti_K**
	Propulsion units	2 Contaz25	wake factor	0.07
	Input power	2 x 3000 kW	thrust red.	0.12
	Front Propeller diam.	3.25 m	Rel. rotat.	1
	Ice class	----------	Mech. eff.	0.95
	Resistance according	Received Residual resistance curve, appended hull		
		Lwl=90.5 m	Draft=4.60 m	
		Bwl=18.0m	Disp/Cb=??m^3	
			Wetted area 1781 m^2	

Vs knots	Pe, total kW	Eta Open-water	Eta prop.	Pd kW	Pb/unit kW
17	1715	0.71	0.67	2553	1344
18	2064	0.71	0.67	3072	1617
19	2631	0.715	0.68	3889	2047
20	3555	0.72	0.68	5218	2746
21	4910	0.725	0.69	7157	3767

Pe=Effective power (kW)
Eta openwater= Openwater eff. of the thruster unit
Eta prop= Propulsion efficiency

Pd=Delivered power (kW)
Pb/unit = input power for the unit (kW)

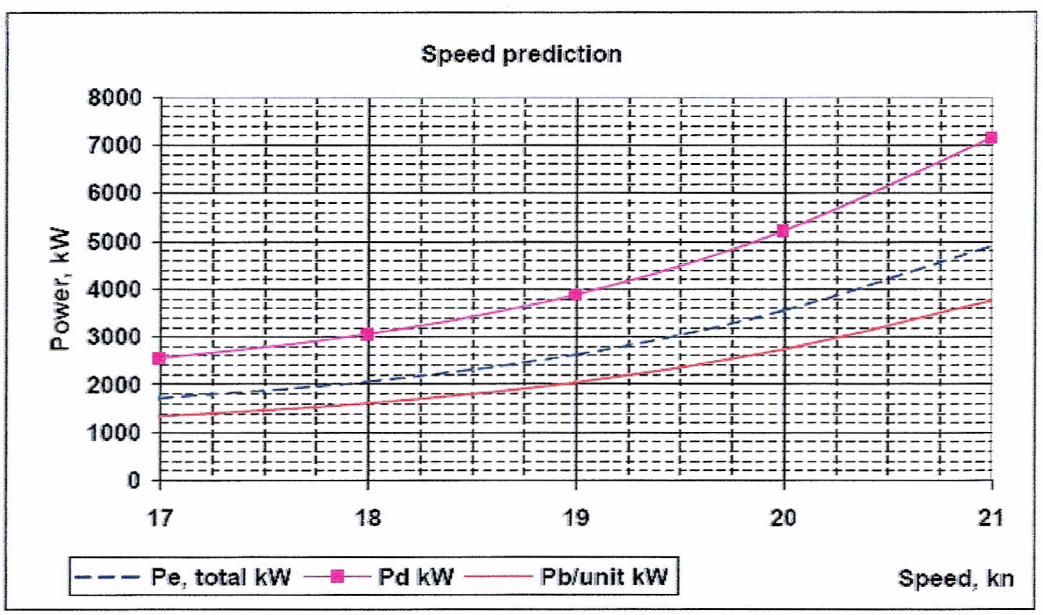

This evaluation has been carefully prepared to meet professional standards
Since it is not possible to determine the accuracy of provided data,
Rolls-Royce Oy Ab assumes no liability nor makes any performance guarantees of any kind.

Powering Calculation made by Steerprop

Preliminary powering prediction for the ferry is made using lines plan and statistical power prediction method "Holtrop". Powering curve with KVL=4.6m is shown in the following. The maximum speed of the vessel according to this prediction is about 20.1 knots.

Powering calculation with KVL = 4.6m at 20 knots:

Pe (No sea margin) 3889 kW;

Hull efficiency (estim) 0.946;

open water efficiency 0.740;

Delivered power 2x2777 kW;
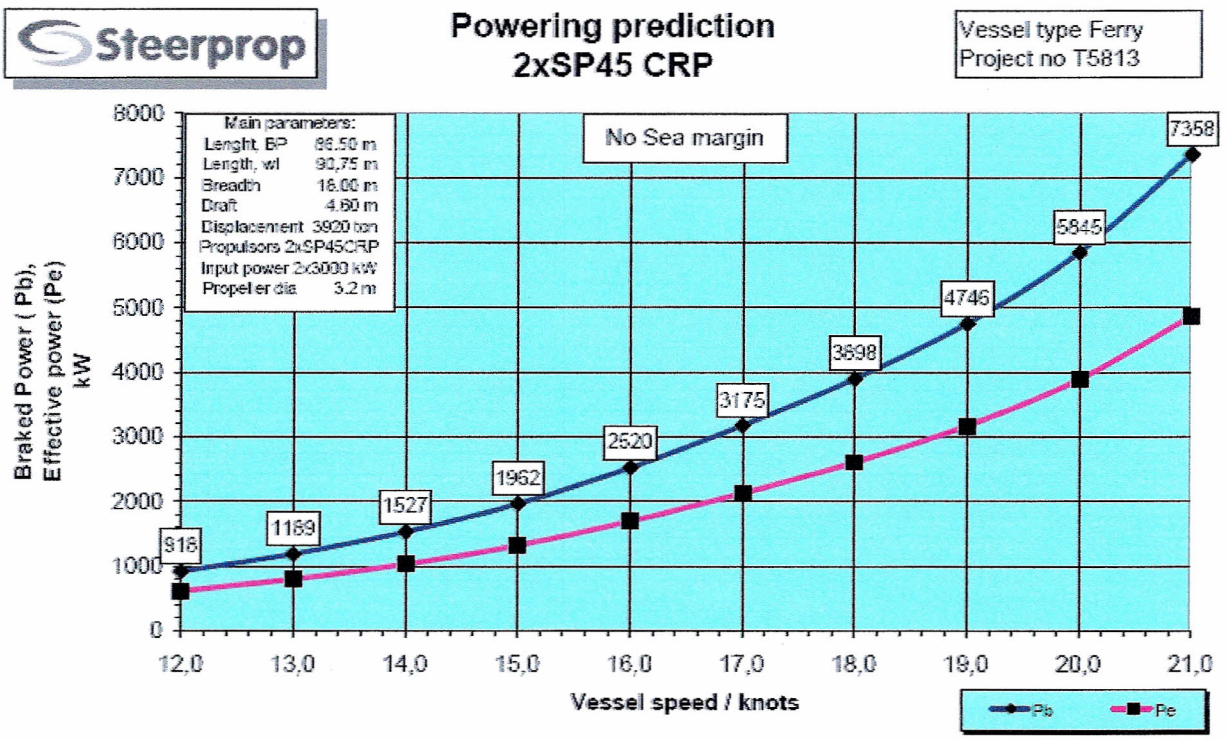
Braked power 2x2922 kW.